Traces in indexed monoidal categories

Mike Shulman[1] Kate Ponto[2]

[1]University of California, San Diego
San Diego, California

[2]University of Kentucky
Lexington, Kentucky

Octoberfest 2011, Ottawa
October 23, 2011

Outline

Indexed monoidal categories

Let **S** have finite products.

Definition

An **S**-indexed symmetric monoidal category is a pseudofunctor

$$\begin{aligned} \mathbf{S}^{op} &\to \mathbf{SymMonCat} \\ A &\mapsto \left(\mathscr{C}^A, \otimes_A, I_A\right) \\ \left(A \xrightarrow{f} B\right) &\mapsto \left(f^* : \mathscr{C}^B \to \mathscr{C}^A\right) \end{aligned}$$

The external product

Definition

For $M \in \mathscr{C}^A$ and $N \in \mathscr{C}^B$, we set

$$M \boxtimes N := (\pi_1^* M \otimes_{A \times B} \pi_2^* N) \qquad \in \mathscr{C}^{A \times B}$$

This is coherently associative and symmetric with unit I_1.
Moreover, for $M, N \in \mathscr{C}^A$ we have:

$$M \otimes_A N = (\Delta_A)^*(M \boxtimes N).$$

Some indexed monoidal categories

Toy example

$\mathbf{S} =$ sets

$\mathscr{C}^A = A$-indexed families of vector spaces (say)

Some indexed monoidal categories

Toy example

$\mathbf{S} =$ sets
$\mathscr{C}^A =$ A-indexed families of vector spaces (say)

Motivating example

$\mathbf{S} =$ topological spaces
$\mathscr{C}^A =$ the homotopy category of spectra parametrized over A

Some indexed monoidal categories

Toy example

$\mathbf{S}$ = sets
$\mathscr{C}^A$ = A-indexed families of vector spaces (say)

Motivating example

$\mathbf{S}$ = topological spaces
$\mathscr{C}^A$ = the homotopy category of spectra parametrized over A

An intermediate example

$\mathbf{S}$ = groupoids
$\mathscr{C}^A$ = the derived category of A-diagrams of chain complexes

Some indexed monoidal categories

Toy example

$\mathbf{S} =$ sets
$\mathscr{C}^A =$ A-indexed families of vector spaces (say)

Motivating example

$\mathbf{S} =$ topological spaces
$\mathscr{C}^A =$ the homotopy category of spectra parametrized over A

An intermediate example

$\mathbf{S} =$ groupoids
$\mathscr{C}^A =$ the derived category of A-diagrams of chain complexes

Uninteresting example (for us)

$\mathbf{S} =$ any category with pullbacks
$\mathscr{C}^A =$ the slice category $\mathbf{S}/A$

Indexed coproducts

Definition

An indexed category has indexed coproducts if each f^* has a left adjoint $f_!$, and any pullback square

$$\begin{tikzcd} A \arrow[r, "k"] \arrow[d, "h"'] & B \arrow[d, "f"] \\ C \arrow[r, "g"'] & D \end{tikzcd}$$

satisfies the Beck-Chevalley condition that

$$h_! k^* \longrightarrow h_! k^* f^* f_! \xrightarrow{\cong} h_! h^* g^* f_! \longrightarrow g^* f_!$$

is an isomorphism.

Productive pullback squares

The following are always pullback squares:

$$\begin{tikzcd} A \times C \arrow[r, "f \times \mathrm{id}_C"] \arrow[d, "\mathrm{id}_A \times g"'] & B \times C \arrow[d, "\mathrm{id}_B \times g"] \\ A \times D \arrow[r, "f \times \mathrm{id}_D"'] & B \times D \end{tikzcd}$$

$$\begin{tikzcd} A \arrow[r, "\Delta"] \arrow[d, "\Delta"'] & A \times A \arrow[d, "\mathrm{id}_A \times \Delta"] \\ A \times A \arrow[r, "\Delta \times \mathrm{id}_A"'] & A \times A \times A \end{tikzcd}$$

$$\begin{tikzcd} A \arrow[r, "(\mathrm{id}_A, f)"] \arrow[d, "f"'] & A \times B \arrow[d, "f \times \mathrm{id}_B"] \\ B \arrow[r, "\Delta_B"'] & B \times B \end{tikzcd}$$

$$\begin{tikzcd} A \arrow[r, "\mathrm{id}_A"] \arrow[d, "\mathrm{id}_A"'] & A \arrow[d, "\Delta"] \\ A \arrow[r, "\Delta"'] & A \times A \end{tikzcd}$$

Homotopy pullback squares

But: Examples like spectra and chain complexes only satisfy the Beck-Chevalley condition for homotopy pullback squares! (And this is what makes things interesting!)

$$\begin{tikzcd} A \times C \arrow[r, "f \times \mathrm{id}_C"] \arrow[d, "\mathrm{id}_A \times g"'] & B \times C \arrow[d, "\mathrm{id}_B \times g"] \\ A \times D \arrow[r, "f \times \mathrm{id}_D"'] & B \times D \end{tikzcd}$$

$$\begin{tikzcd} A \arrow[r, "\Delta"] \arrow[d, "\Delta"'] & A \times A \arrow[d, "\mathrm{id}_A \times \Delta"] \\ A \times A \arrow[r, "\Delta \times \mathrm{id}_A"'] & A \times A \times A \end{tikzcd}$$

$$\begin{tikzcd} A \arrow[r, "(\mathrm{id}_A, f)"] \arrow[d, "f"'] & A \times B \arrow[d, "f \times \mathrm{id}_B"] \\ B \arrow[r, "\Delta_B"'] & B \times B \end{tikzcd}$$

$$\begin{tikzcd} A \arrow[r, "\mathrm{id}_A"] \arrow[d, "\mathrm{id}_A"'] & A \arrow[d, "\Delta"] \\ A \arrow[r, "\Delta"'] & A \times A \end{tikzcd}$$

$\otimes$ preserves indexed coproducts

Definition

$\otimes$ preserves indexed coproducts if the adjunctions $f_! \dashv f^*$ are all "Hopf adjunctions", i.e. each map

$$f_!(M \otimes_A f^* N) \longrightarrow f_!(f^* f_! M \otimes_A f^* N) \cong f_! f^*(f_! M \otimes_B N) \longrightarrow f_! M \otimes_B N$$

is an isomorphism.

Lemma

This is equivalent to the canonical morphism

$$(f \times g)_!(M \boxtimes N) \longrightarrow f_! M \boxtimes g_! N$$

always being an isomorphism.

Outline

String diagrams for objects

We start with string diagrams for morphisms in **S**, proceeding down the page, with morphisms in inverted triangles.

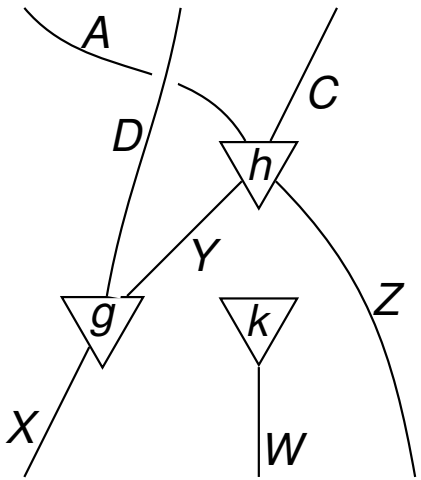

Empty triangles denote

- diagonal morphisms $\Delta\colon A \to A \times A$: 
- projection morphisms $\pi\colon A \to 1$: 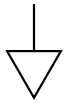

String diagrams for objects

We add a second type of vertex, labeled by objects of fiber categories.

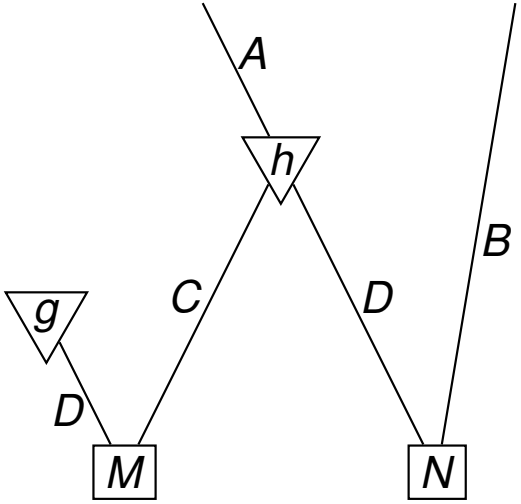

For $M \in \mathscr{C}^{D \times C}$ and $N \in \mathscr{C}^{D \times B}$, this diagram denotes

$$(g \times h \times \mathrm{id}_B)^*(M \boxtimes N)$$

String diagrams for objects

We add a second type of vertex, labeled by objects of fiber categories.

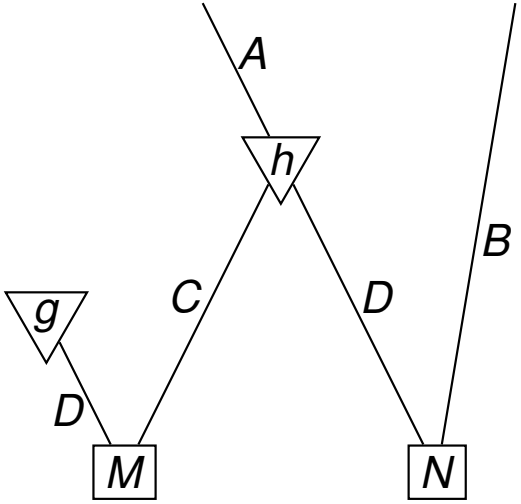

For $M \in \mathscr{C}^{D \times C}$ and $N \in \mathscr{C}^{D \times B}$, this diagram denotes

$$(g \times h \times \mathrm{id}_B)^*(M \boxtimes N) \qquad \text{or}$$
$$(h \times \mathrm{id})^*(g \times \mathrm{id})^*(M \boxtimes N)$$

String diagrams for objects

We add a second type of vertex, labeled by objects of fiber categories.

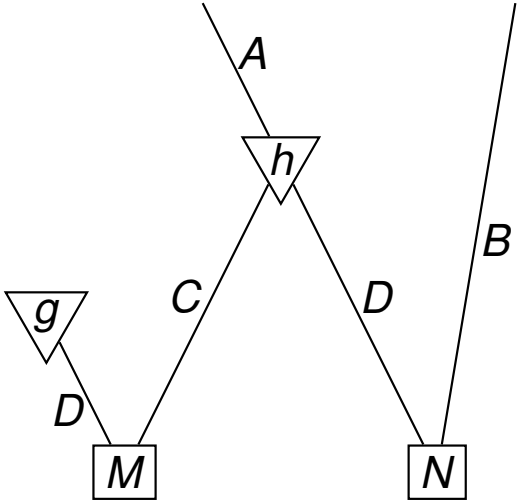

For $M \in \mathscr{C}^{D \times C}$ and $N \in \mathscr{C}^{D \times B}$, this diagram denotes

$$(g \times h \times \mathrm{id}_B)^*(M \boxtimes N) \qquad \text{or}$$
$$(h \times \mathrm{id})^*(g \times \mathrm{id})^*(M \boxtimes N) \qquad \text{or}$$
$$(h \times \mathrm{id})^*\big(\big((g \times \mathrm{id})^* M\big) \boxtimes N\big).$$

Indexed coproducts

We add a third type of vertex, labeled by morphisms of **S** inside *upward*-pointing triangles, with source and target reversed.

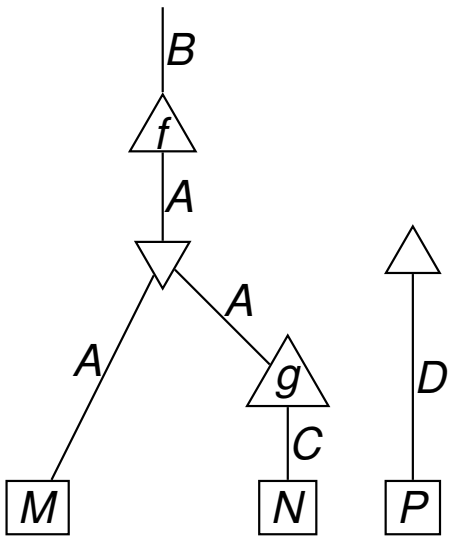

For $f\colon A \to B$, $g\colon C \to A$, $M \in \mathscr{C}^A$, $N \in \mathscr{C}^C$, and $P \in \mathscr{C}^D$, this diagram denotes

$$\big(f_! \Delta^* (M \boxtimes g_! N)\big) \boxtimes \pi_! P \qquad \in \mathscr{C}^B$$

Productive pullback squares

The following are always pullback squares:

$$\begin{tikzcd} A \times C \arrow[r, "f \times \mathrm{id}_C"] \arrow[d, "\mathrm{id}_A \times g"'] & B \times C \arrow[d, "\mathrm{id}_B \times g"] \\ A \times D \arrow[r, "f \times \mathrm{id}_D"'] & B \times D \end{tikzcd}$$

$$\begin{tikzcd} A \arrow[r, "\Delta"] \arrow[d, "\Delta"'] & A \times A \arrow[d, "\mathrm{id}_A \times \Delta"] \\ A \times A \arrow[r, "\Delta \times \mathrm{id}_A"'] & A \times A \times A \end{tikzcd}$$

$$\begin{tikzcd} A \arrow[r, "(\mathrm{id}_A, f)"] \arrow[d, "f"'] & A \times B \arrow[d, "f \times \mathrm{id}_B"] \\ B \arrow[r, "\Delta_B"'] & B \times B \end{tikzcd}$$

$$\begin{tikzcd} A \arrow[r, "\mathrm{id}_A"] \arrow[d, "\mathrm{id}_A"'] & A \arrow[d, "\Delta"] \\ A \arrow[r, "\Delta"'] & A \times A \end{tikzcd}$$

Beck-Chevalley conditions

The corresponding Beck-Chevalley conditions say:

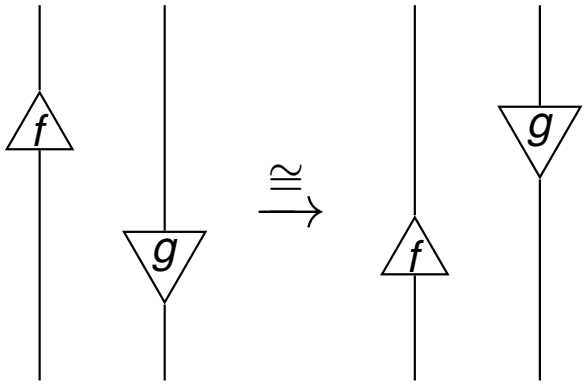

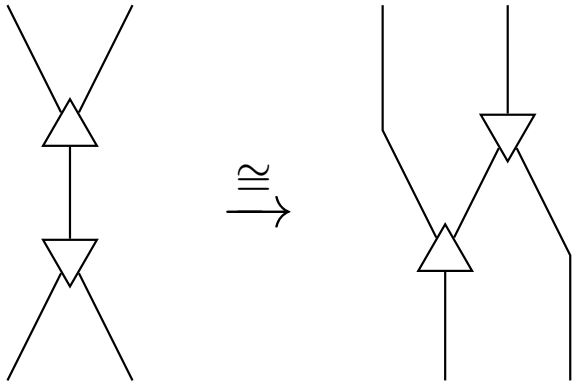

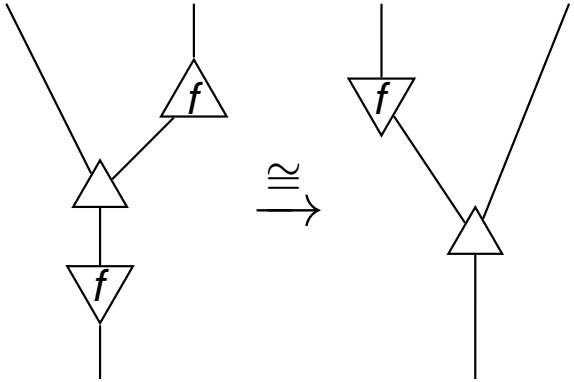

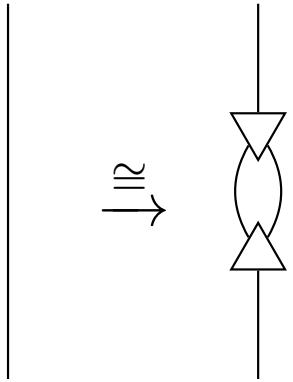

$\otimes$ preserves indexed coproducts

Recall that $\otimes$ preserves indexed coproducts if and only if

$$(f \times g)_!(M \boxtimes N) \cong f_! M \boxtimes g_! N.$$

This is necessary in order to interpret the following diagram unambiguously:

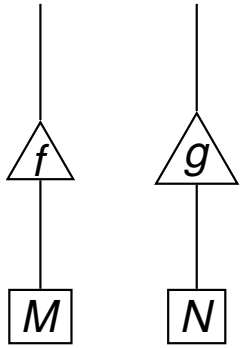

String diagrams for morphisms

First we turn the string diagrams for objects on their sides. . .

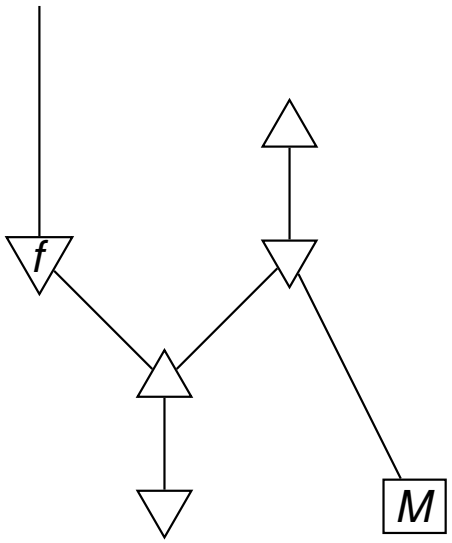

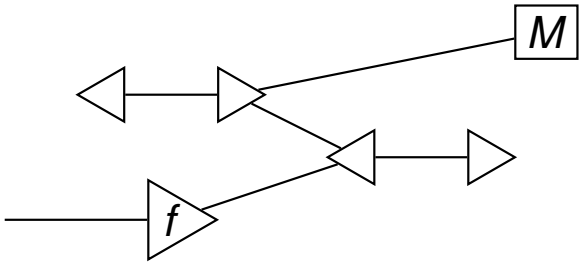

(Think of the right-hand diagram as written on a piece of paper lying horizontally perpendicular to the screen.)

String diagrams for morphisms

. . . then we add nodes between these “horizontal slices”, with strings connecting them to the nodes they affect.

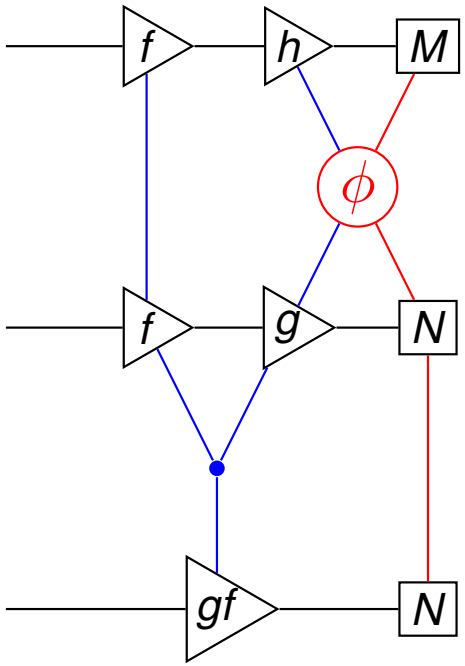

This depicts

$$f^*h^*M \xrightarrow{f^*(\phi)} f^*g^*N \xrightarrow{\cong} (gf)^*N$$

Example: naturality

For $A \xrightarrow{f} B \xrightarrow{g} C$ in $\mathbf{S}$ and $\phi\colon M \to N$ in $\mathscr{C}^D$, the following square commutes:

$$\begin{tikzcd} f^*g^*M \arrow[r, "\cong"] \arrow[d, "f^*g^*\phi"'] & (gf)^*M \arrow[d, "(gf)^*\phi"] \\ f^*g^*N \arrow[r, "\cong"'] & (gf)^*N. \end{tikzcd}$$

by naturality of $f^*g^* \cong (gf)^*$.

Example: naturality

Equivalently:

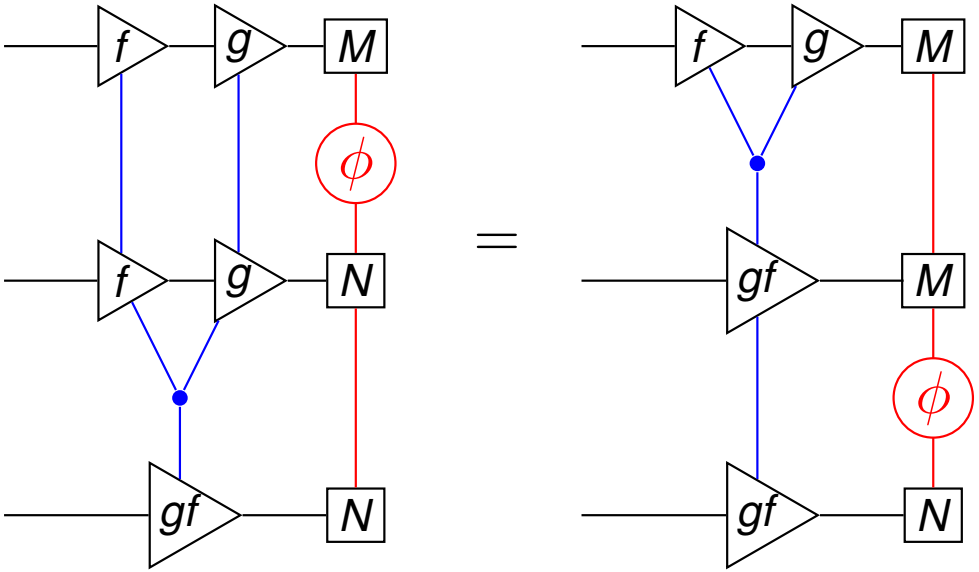

A triangle identity for $g_! \dashv g^*$

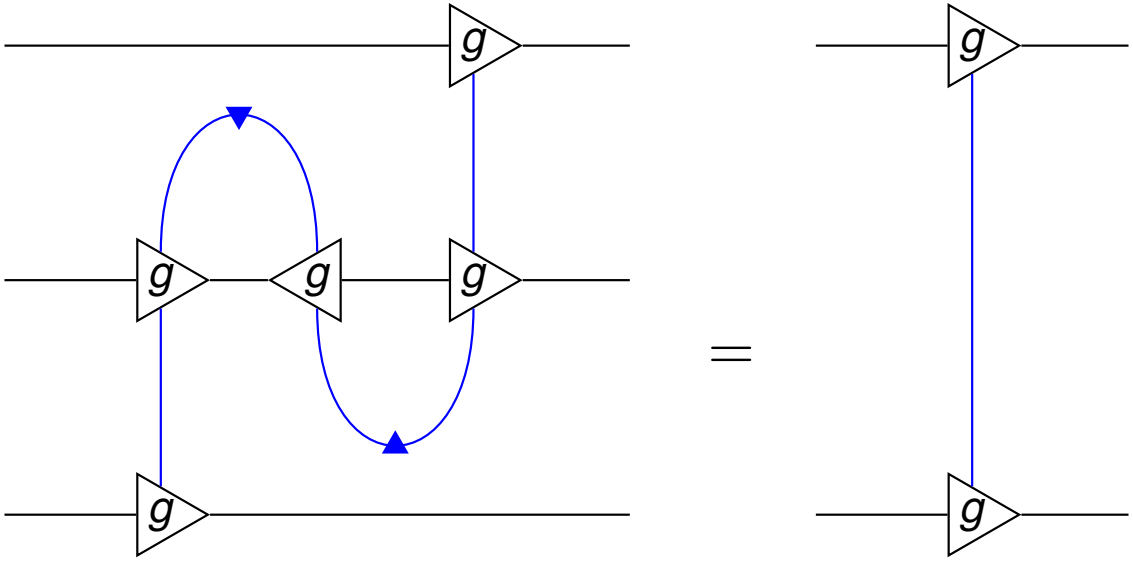

A triangle identity for $\Delta_! \dashv \Delta^*$

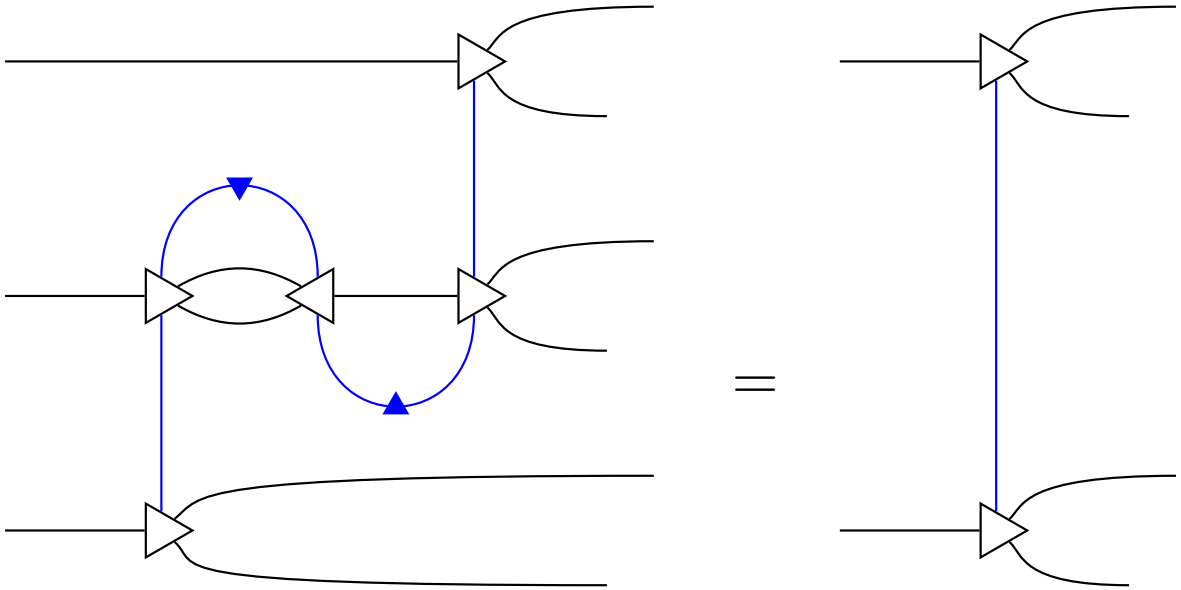

Beck-Chevalley conditions, again

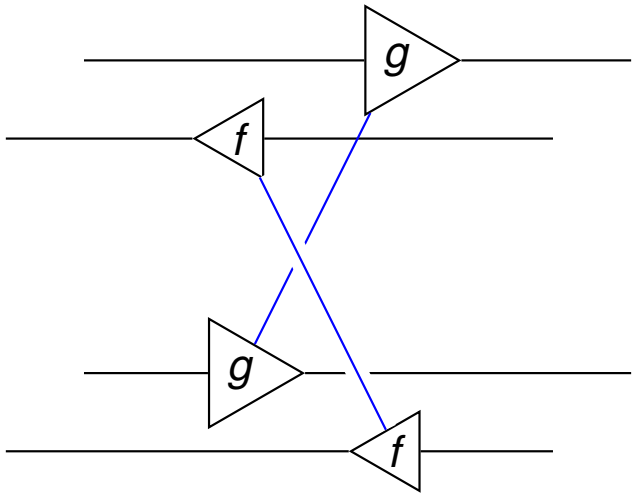

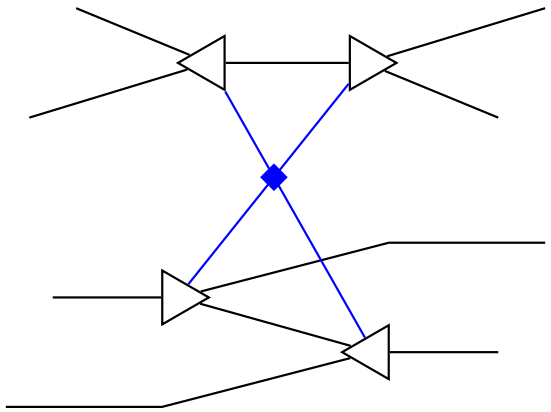

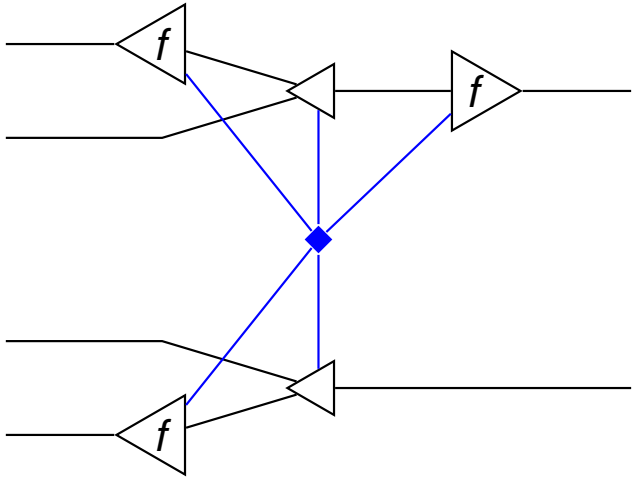

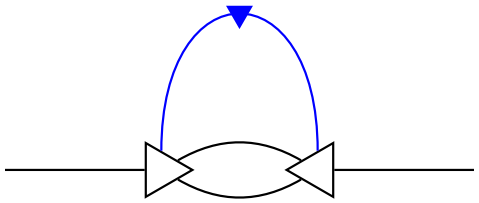

Outline

Classical fixed point theory in a nutshell

Definition

Let $\mathbf{C}$ be a symmetric monoidal category, $M \in \mathbf{C}$ a dualizable object, and $f\colon M \to M$. The trace of f is the composite

$$I \xrightarrow{\eta} M \otimes M^\bigstar \xrightarrow{f\otimes 1} M \otimes M^\bigstar \xrightarrow{\cong} M^\bigstar \otimes M \xrightarrow{\varepsilon} I.$$

Paradigm

Let $\mathbf{S}$ be cartesian monoidal, $\mathbf{C}$ symmetric monoidal and "additive", and $\Sigma\colon \mathbf{S} \to \mathbf{C}$ a symmetric monoidal functor. Given $f\colon A \to A$ in $\mathbf{S}$, if $\Sigma(A)$ is dualizable, then the trace of $\Sigma(f)$ gives information about the fixed points of f.

A larger nutshell

For any **S**-indexed symmetric monoidal category $\mathscr{C}$, we have a symmetric monoidal functor

$$\begin{aligned} \Sigma\colon (\mathbf{S}, \times, 1) &\to (\mathscr{C}^1, \otimes_1, I_1) \\ A &\mapsto (\pi_A)_! I_A \cong (\pi_A)_!(\pi_A)^* I_1 \end{aligned}$$

$$\Updownarrow A$$

Most interesting examples of Σ seem to arise in this way.

The toy example

- $\mathbf{S}$ = sets
- $\mathscr{C}^1$ = vector spaces

- $\Sigma(A)$ = a vector space with basis A
- A finite $\Rightarrow$ $\Sigma(A)$ dualizable

- $\Sigma(f)$ = the matrix with entries $m_{a,f(a)} = 1$ and others 0
- $\mathrm{tr}(\Sigma(f)) = \sum_{a \in A} m_{a,a}$ = the number of fixed points of f.

The motivating example

(Dold–Puppe)

- $\mathbf{S}$ = topological spaces
- $\mathscr{C}^1$ = the stable homotopy category of spectra

- $\Sigma(A)$ = the suspension spectrum $\Sigma^\infty_+(A)$
- A a closed smooth manifold $\Rightarrow$ $\Sigma(A)$ dualizable

- $\mathrm{tr}(\Sigma(f))$ = the total fixed-point index of f

The motivating example

(Dold–Puppe)

- $\mathbf{S}$ = topological spaces
- $\mathscr{C}^1$ = the stable homotopy category of spectra

- $\Sigma(A)$ = the suspension spectrum $\Sigma^\infty_+(A)$
- A a closed smooth manifold $\Rightarrow$ $\Sigma(A)$ dualizable

- $\mathrm{tr}(\Sigma(f))$ = the total fixed-point index of f

Remarks

- The "homology" functor on spectra preserves traces, so $\mathrm{tr}(\Sigma(f)) = \mathrm{tr}(H_*(f))$, the Lefschetz number.
- If f has no fixed points, $\mathrm{tr}(\Sigma(f)) = 0$.
  This is the Lefschetz fixed-point theorem.

The intermediate example

- $\mathbf{S}$ = groupoids
- $\mathscr{C}^1$ = the derived category of chain complexes

- $\Sigma(A)$ = simplicial chains on the nerve of A
- A finitely generated and free $\Rightarrow$ $\Sigma(A)$ dualizable

- $\mathrm{tr}(\Sigma(f))$ = the sum of:
  - the number of objects of A (literally) fixed by f;
  - for each generating morphism γ of A,
    - the number of times γ^{-1} appears in $f(\gamma)$,
    - *minus* the number of times γ appears in $f(\gamma)$.

Outline

Constructing a bicategory

Theorem (May–Sigurdsson, S.)

There is a bicategory $\underline{\mathscr{C}}$ *with*

- *objects of* $\underline{\mathscr{C}}$ *= objects of* $\mathbf{S}$
- *hom-categories* $\underline{\mathscr{C}}(A, B) = \mathscr{C}^{A \times B}$

$\underline{\mathscr{C}}$ *is symmetric monoidal and every object is its own dual.*

Examples

- $\mathbf{S} =$ sets, $\mathscr{C} =$ families of vector spaces
  $\Rightarrow$ $\underline{\mathscr{C}} =$ matrices of vector spaces
- $\mathbf{S} =$ groupoids, $\mathscr{C} =$ diagrams of chain complexes
  $\Rightarrow$ $\underline{\mathscr{C}} =$ chain-complex-valued profunctors

The bicategory structure

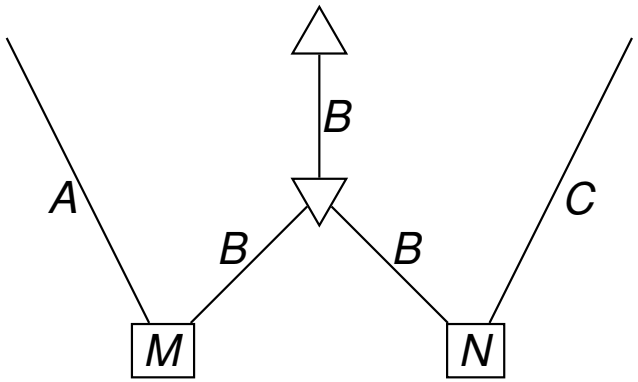

$$M \odot N = (\pi_{13})_! \Delta^* (M \boxtimes N)$$

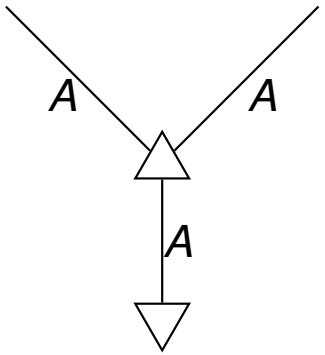

$$U_A = \Delta_! \pi_A^* I_1$$

Associativity

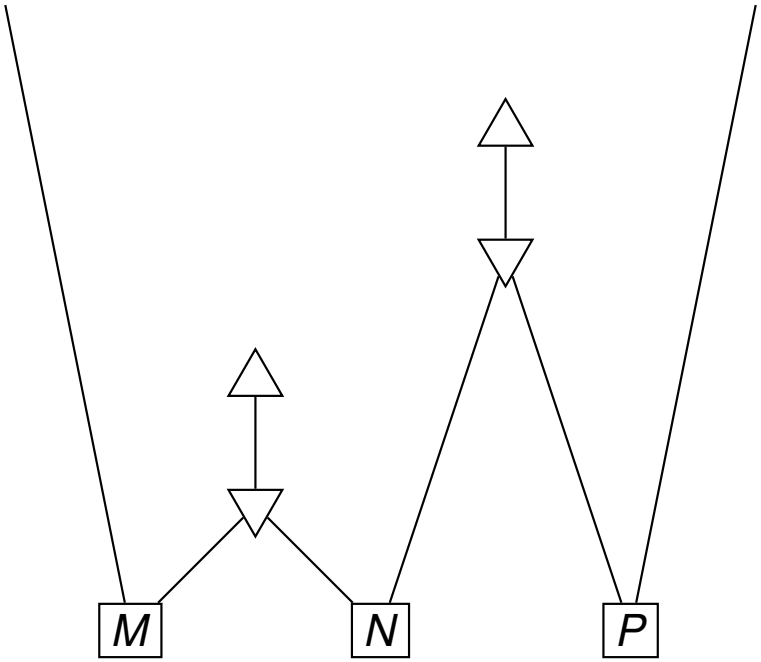

$$(M \odot N) \odot P$$

Associativity

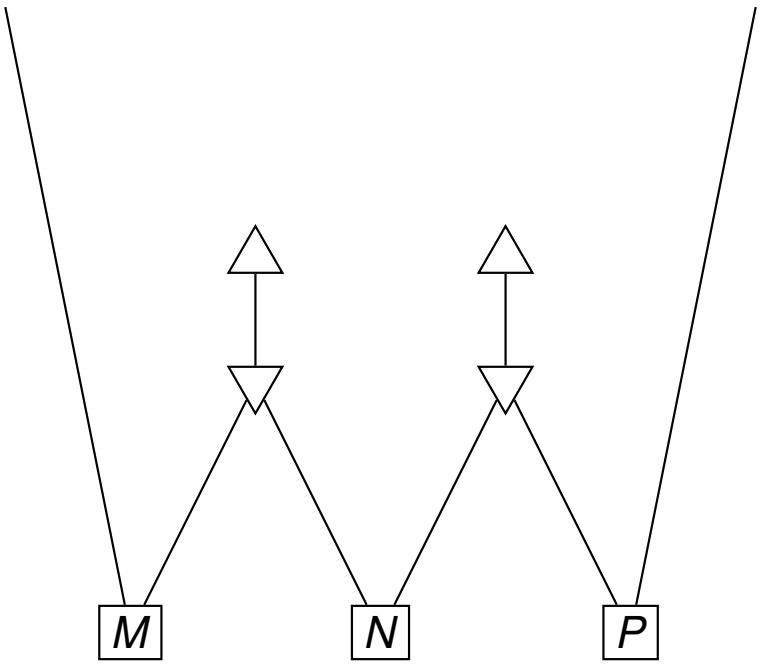

Associativity

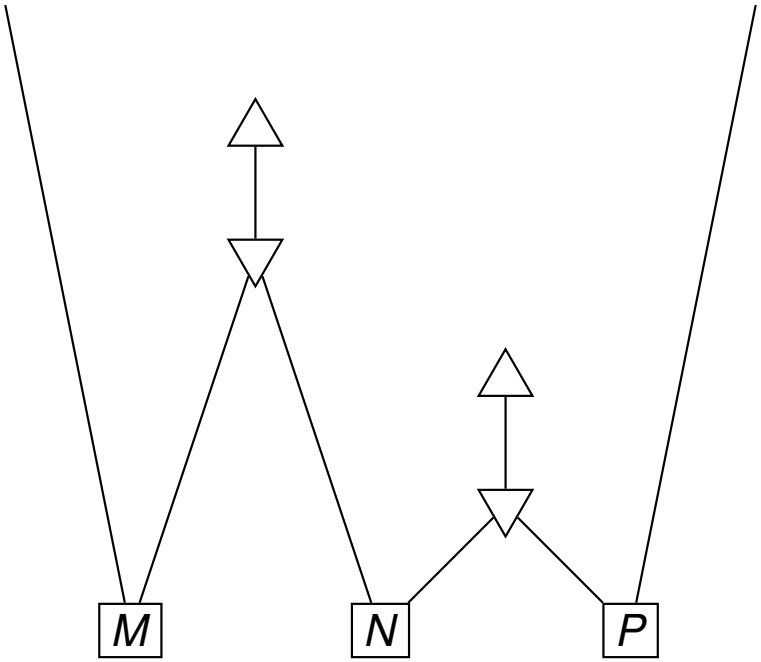

$$M \odot (N \odot P)$$

Unitality

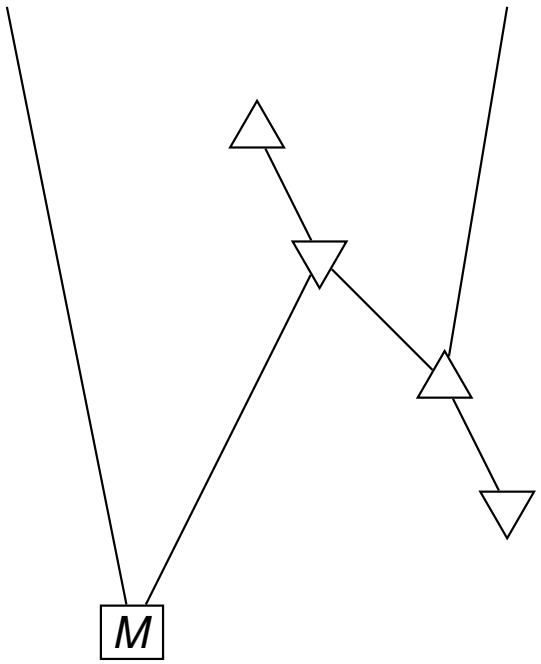

$$M \odot U_B$$

Unitality

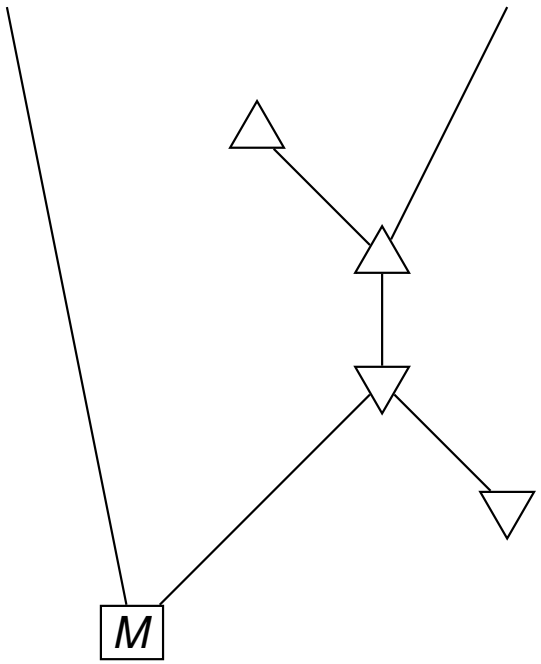

Unitality

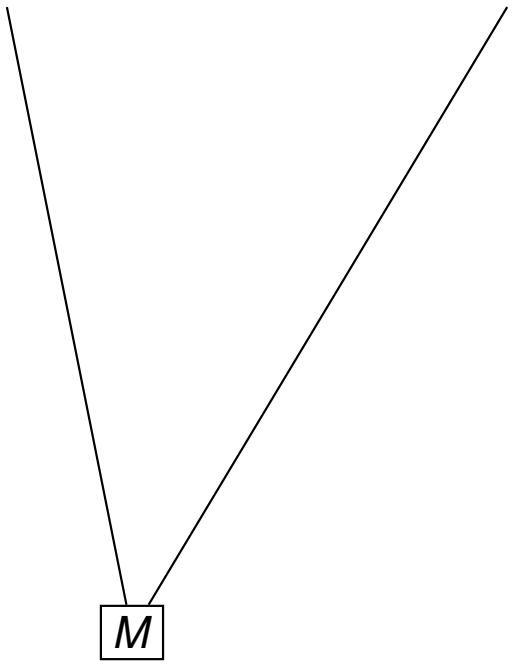

M

Embedding $\mathscr{C}$ in $\underline{\mathscr{C}}$

We have equivalences

$$\begin{array}{ccccc} \mathscr{C}^A & \simeq & \underline{\mathscr{C}}(A,1) & \simeq & \underline{\mathscr{C}}(1,A) \\ M & \mapsto & \widehat{M} & \mapsto & \check{M} \end{array}$$

Embedding $\mathscr{C}$ in $\underline{\mathscr{C}}$

We have equivalences

$$\begin{array}{ccccc} \mathscr{C}^A & \simeq & \underline{\mathscr{C}}(A,1) & \simeq & \underline{\mathscr{C}}(1,A) \\ M & \mapsto & \widehat{M} & \mapsto & \check{M} \end{array}$$

Theorem (May–Sigurdsson, Ponto–S.)

$\widehat{M}$ has an adjoint in $\underline{\mathscr{C}}$ $\iff$ M is dualizable in $\mathscr{C}^A$

Proof.

By string diagram manipulation... $\square$

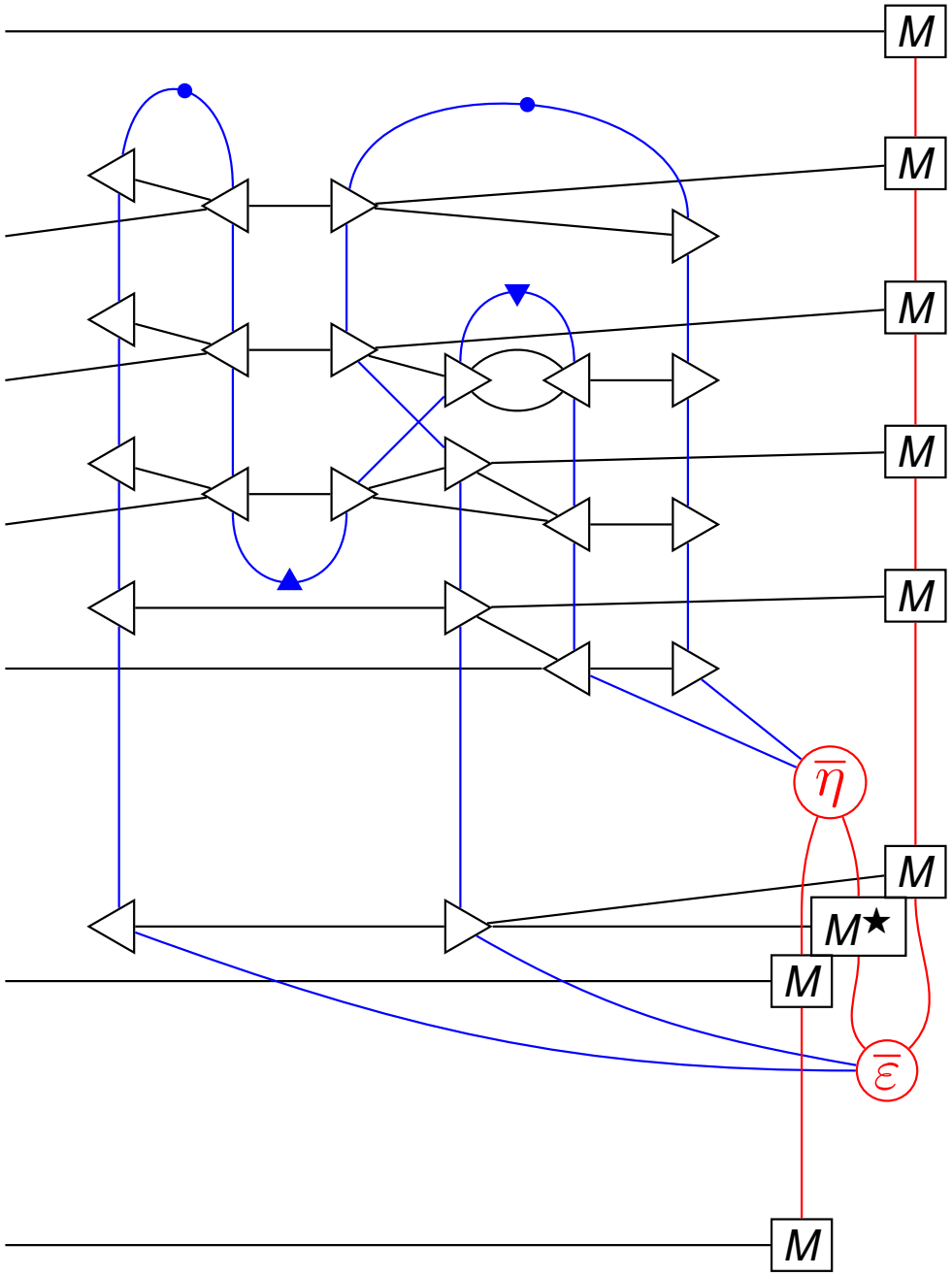
M
M
M
M
M
$\overline{\eta}$
M
M★
M
$\overline{\varepsilon}$
M

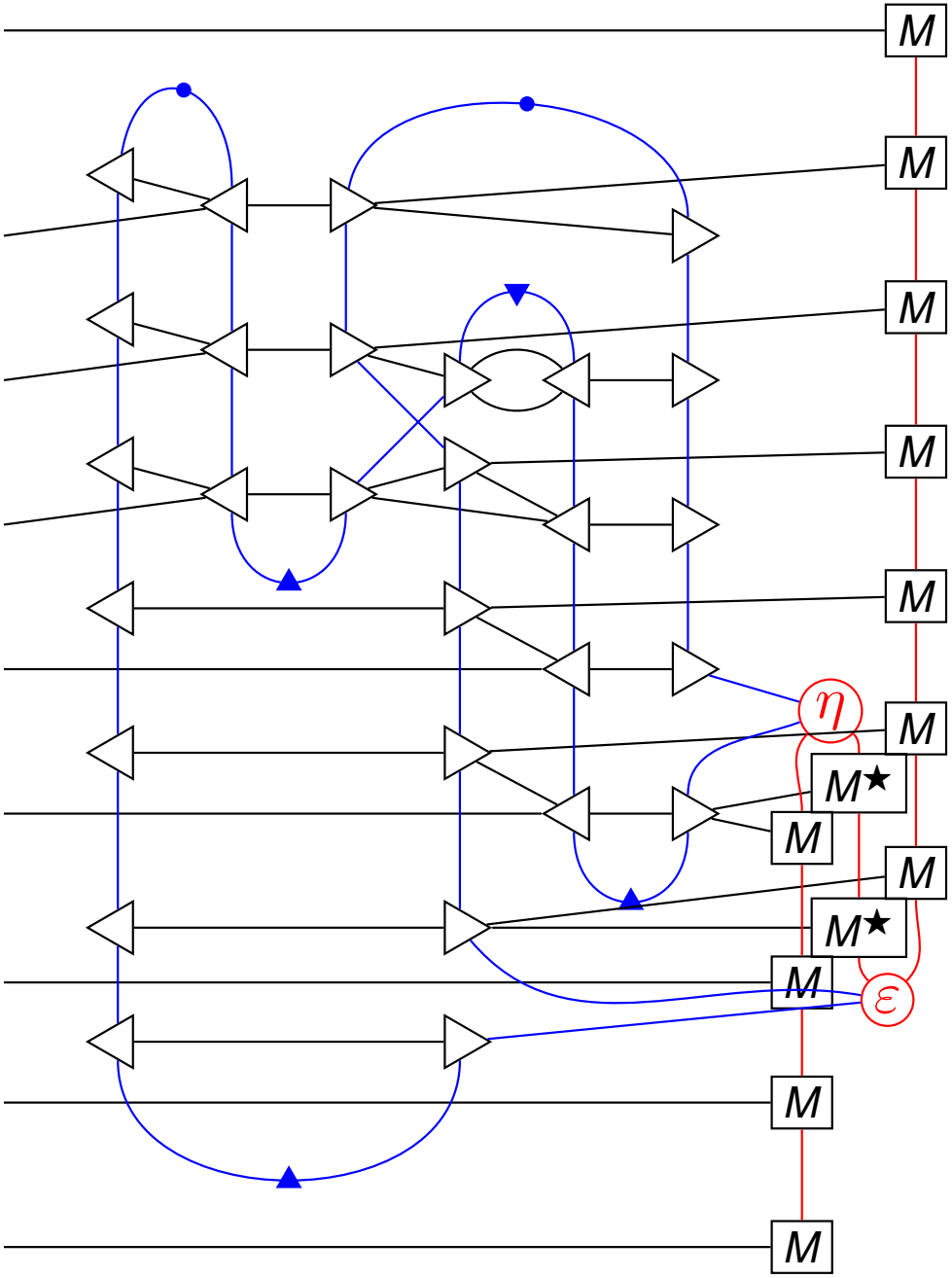
M
M
M
M
M
M
M
M★
M
M
M★
M
ε
M
M
η

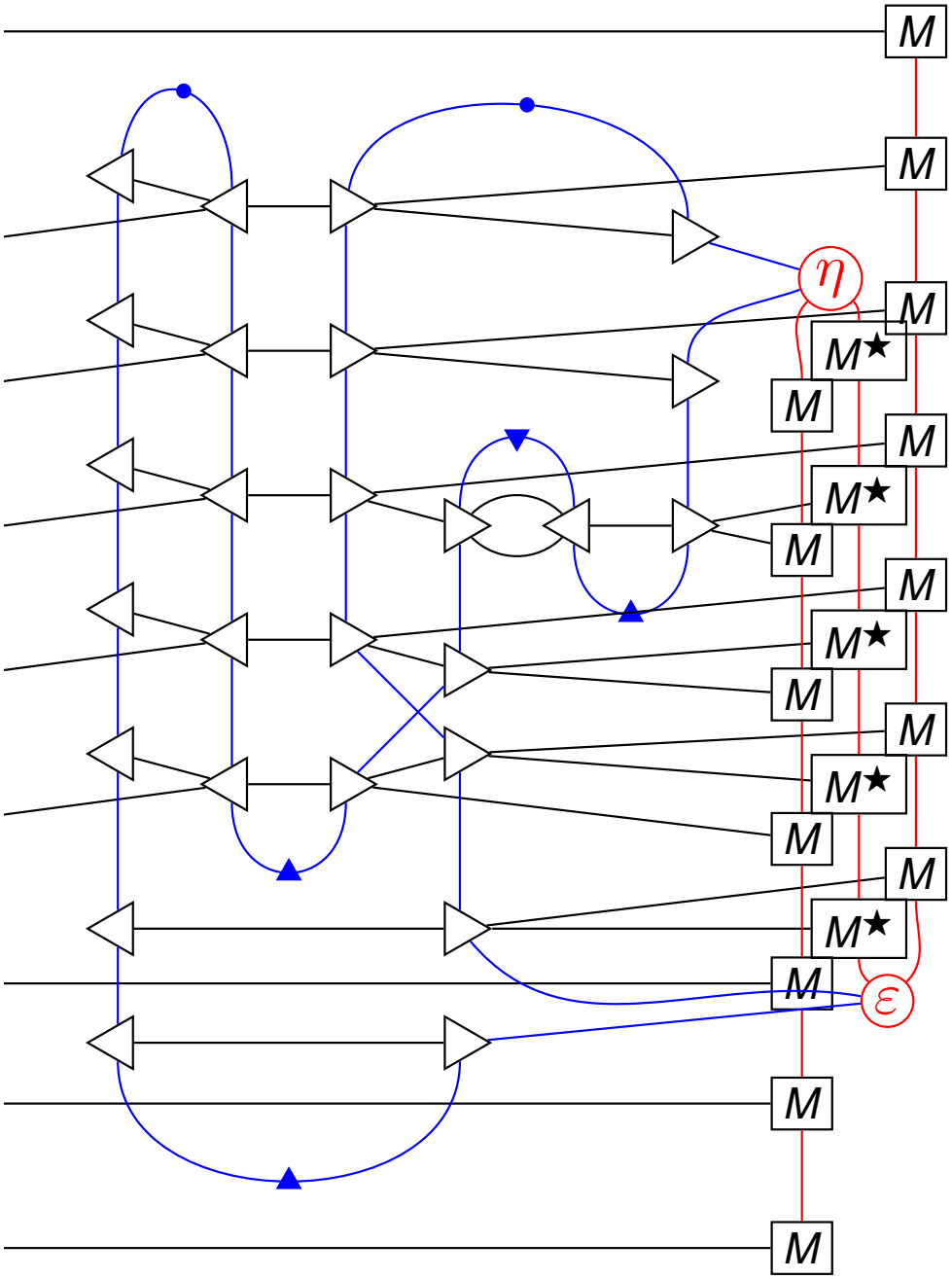
M
M
M
M★
M
M
M★
M
M
M★
M
M
M★
M
M
M★
M
M
M
M
η
ε

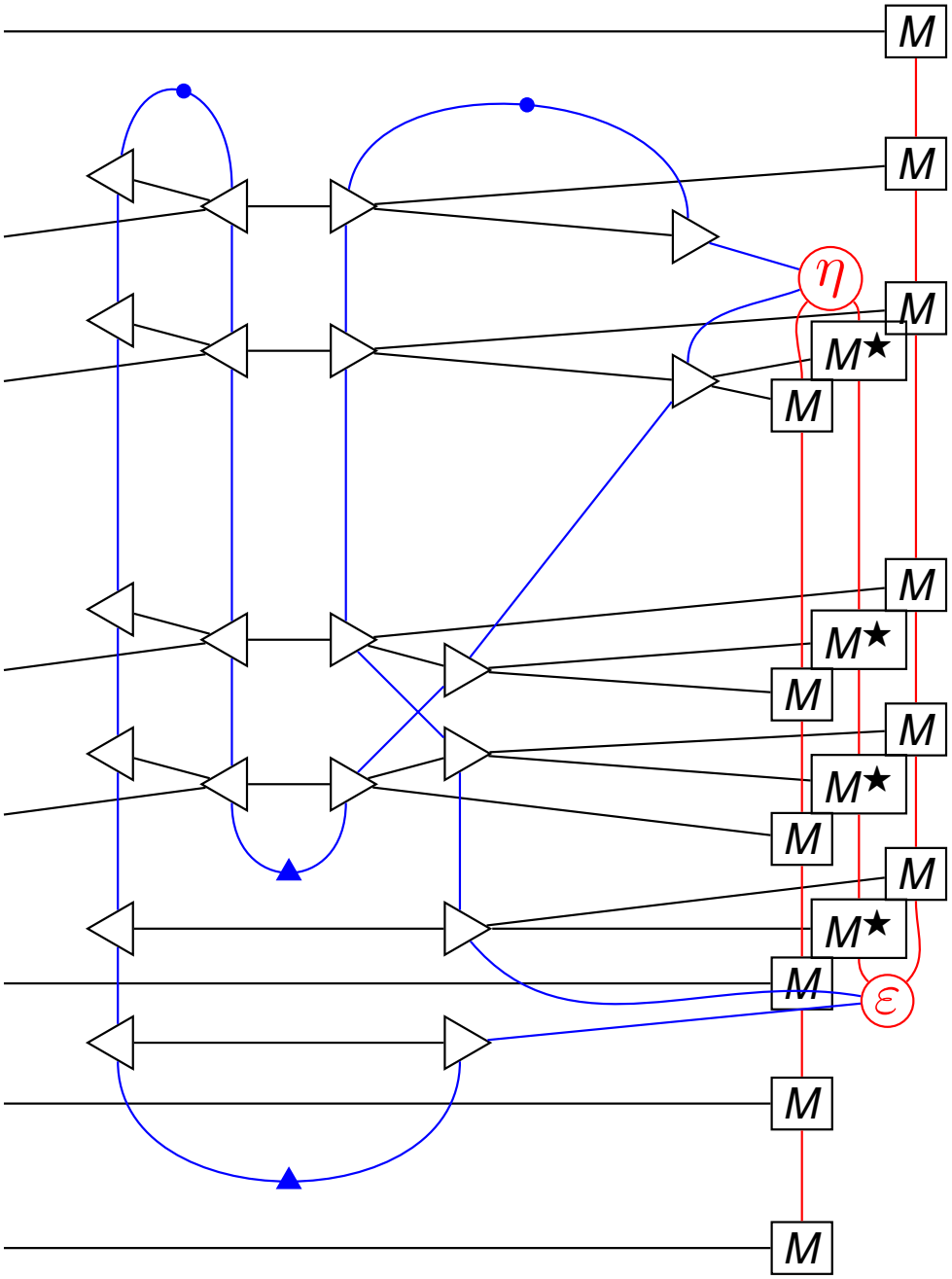
M
M
M
M★
M
M
M★
M
M
M★
M
M
M★
M
M
M
M
η
ε

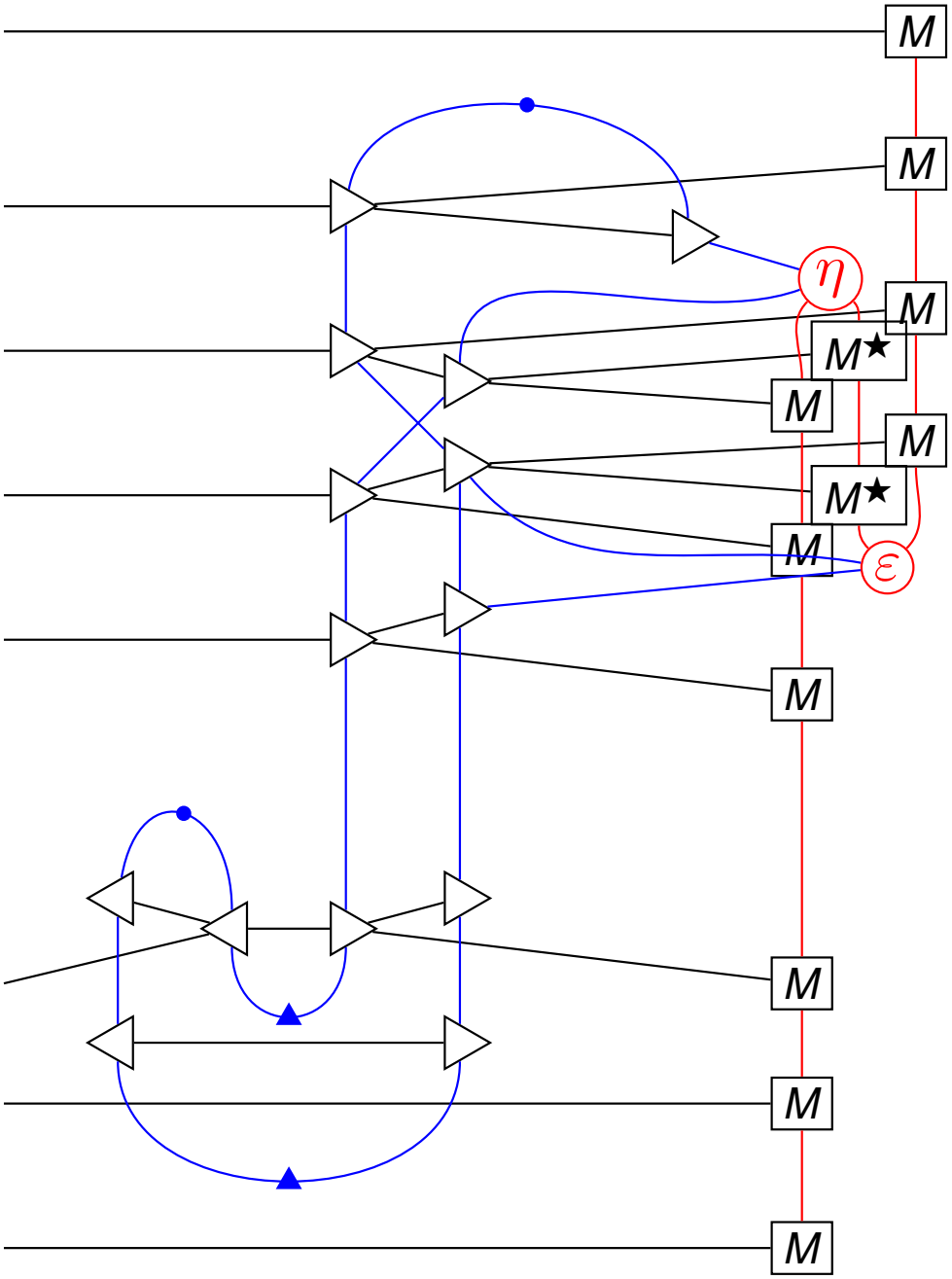
M
M
M
M★
M
M
M★
M
M
M
M
M
η
ε

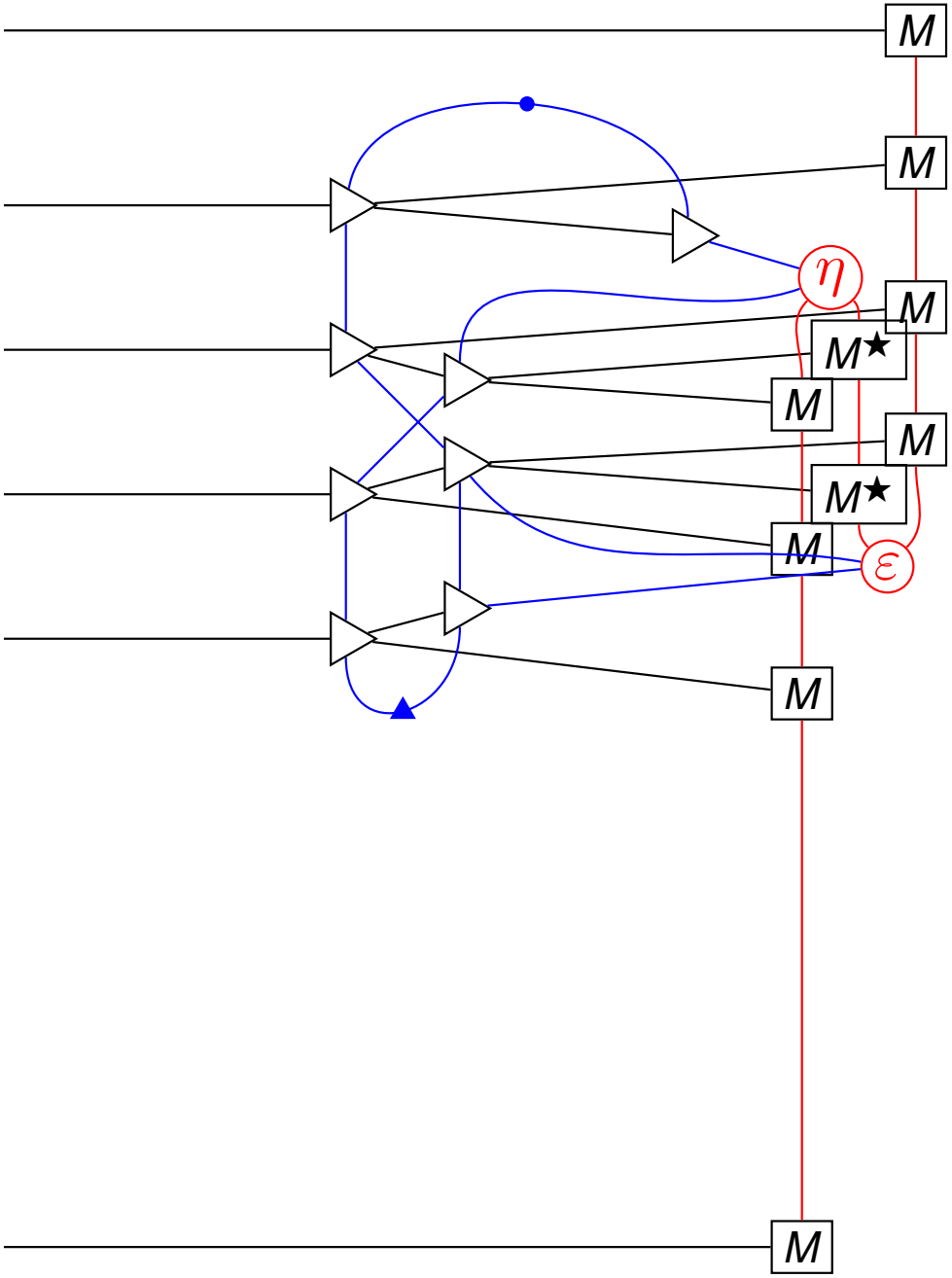
M
M
M
M★
M
M
M★
M
M
M
η
ε

Total duality

Definition

$M \in \mathscr{C}^A$ is totally dualizable if $\check{M}$ has an adjoint in $\underline{\mathscr{C}}$.

We say $A \in \mathbf{S}$ is totally dualizable if I_A is.

Total duality

Definition

$M \in \mathscr{C}^A$ is totally dualizable if $\breve{M}$ has an adjoint in $\underline{\mathscr{C}}$.

We say $A \in \mathbf{S}$ is totally dualizable if I_A is.

Theorem (May–Sigurdsson)

If A is totally dualizable, then $\Sigma(A)$ is dualizable in $\mathscr{C}^1$.

Proof.

- $\Sigma(A) \cong \breve{I_A} \odot \widehat{I_A}$ (check).
- But $\widehat{I_A}$ always has an adjoint, since $I_A \in \mathscr{C}^A$ is always dualizable. $\square$

Total duality

Definition

$M \in \mathscr{C}^A$ is totally dualizable if $\breve{M}$ has an adjoint in $\underline{\mathscr{C}}$.

We say $A \in \mathbf{S}$ is totally dualizable if I_A is.

Theorem (May–Sigurdsson)

If A is totally dualizable, then $\Sigma(A)$ is dualizable in $\mathscr{C}^1$.

Proof.

- $\Sigma(A) \cong \breve{I_A} \odot \widehat{I_A}$ (check).
- But $\widehat{I_A}$ always has an adjoint, since $I_A \in \mathscr{C}^A$ is always dualizable. $\square$

The converse usually holds in practice.

Traces in bicategories

Problem

Suppose $M\colon A \nrightarrow B$ is a 1-cell in a bicategory $\underline{\mathscr{B}}$ with an adjoint $M^\bigstar$, and $f\colon M \to M$. For its trace, we want

$$U_A \xrightarrow{\eta} M \odot M^\bigstar \xrightarrow{f\otimes 1} M \odot M^\bigstar \quad ??? \quad M^\bigstar \odot M \xrightarrow{\varepsilon} U_B.$$

But $M \odot M^\bigstar\colon A \nrightarrow A$ while $M^\bigstar \odot M\colon B \nrightarrow B$.

Traces in bicategories

Problem

Suppose $M\colon A \nrightarrow B$ is a 1-cell in a bicategory $\underline{\mathscr{B}}$ with an adjoint $M^\bigstar$, and $f\colon M \to M$. For its trace, we want

$$U_A \xrightarrow{\eta} M \odot M^\bigstar \xrightarrow{f\otimes 1} M \odot M^\bigstar \quad ??? \quad M^\bigstar \odot M \xrightarrow{\varepsilon} U_B.$$

But $M \odot M^\bigstar : A \nrightarrow A$ while $M^\bigstar \odot M\colon B \nrightarrow B$.

Solution (Ponto)

If $\underline{\mathscr{B}}$ is symmetric monoidal and A and B have duals, then *endo-1-cells* have traces, which are cyclic. We call

$$\mathrm{Tr}(U_A) \xrightarrow{\eta} \mathrm{Tr}(M\odot M^\bigstar) \xrightarrow{f\otimes 1} \mathrm{Tr}(M\odot M^\bigstar) \xrightarrow{\cong} \mathrm{Tr}(M^\bigstar\odot M) \xrightarrow{\varepsilon} \mathrm{Tr}(U_B).$$

the trace of f.

Total-duality traces

If A is totally dualizable with dual N, the total-duality trace of $f\colon A \to A$ is the twisted trace of $I_A \cong I_A \odot A_f$:

$$I_1 \xrightarrow{\eta} \mathrm{Tr}(\check{I}_A \odot N) \xrightarrow{\cong} \mathrm{Tr}(\check{I}_A \odot A_f \odot N) \xrightarrow{\cong} \mathrm{Tr}(A_f \odot N \odot \check{I}_A) \xrightarrow{\varepsilon} \mathrm{Tr}(A_f).$$

Here $A_f = (1 \times f)^*(\Delta_A)_! I_A$.

Total-duality traces

If A is totally dualizable with dual N, the total-duality trace of $f\colon A \to A$ is the twisted trace of $I_A \cong I_A \odot A_f$:

$$I_1 \xrightarrow{\eta} \mathrm{Tr}(\check{I}_A \odot N) \xrightarrow{\cong} \mathrm{Tr}(\check{I}_A \odot A_f \odot N) \xrightarrow{\cong} \mathrm{Tr}(A_f \odot N \odot \check{I}_A) \xrightarrow{\varepsilon} \mathrm{Tr}(A_f).$$

Here $A_f = (1 \times f)^*(\Delta_A)_! I_A$.

Theorem (Ponto–S.)

The trace of $\Sigma(f)$ factors through the total-duality trace of f:

$$\begin{tikzcd} I_1 \arrow[r] \arrow[dr, "\mathrm{tr}(\Sigma(f))"'] & Tr(A_f) \arrow[d] \\ & I_1 . \end{tikzcd}$$

Proof.

An elementary property of traces. $\square$

The toy example

- $\mathbf{S}$ = sets, $\mathscr{C}^A$ = A-indexed families of vector spaces.
- $\mathrm{Tr}(A_f)$ = a vector space with basis $\mathrm{Fix}(f)$, the set of fixed points of f.
- The map $\mathrm{Tr}(A_f) \to \Bbbk$ sends each basis element to 1.
- The total-duality trace of f is the formal sum of all the fixed points of f.

$$\begin{tikzcd}
1 \arrow[r, mapsto] \arrow[dr, mapsto] & \sum_{f(x)=x} x \arrow[d, mapsto] \\
& \#\{x \mid f(x) = x\}.
\end{tikzcd}$$

The motivating example

- $\mathbf{S}$ = spaces, $\mathscr{C}^A$ = spectra parametrized over A.
- Total duality is called Costenoble–Waner duality.
- $\mathrm{Tr}(A_f)$ = the suspension spectrum of the twisted free loop space

$$\Lambda^f A = \left\{ \gamma \colon [0,1] \to A \;\middle|\; \gamma(1) = f(\gamma(0)) \right\}$$

- The total-duality trace of f is the Reidemeister trace.
  The theorem says that it refines the fixed-point index.

The motivating example

- $\mathbf{S}$ = spaces, $\mathscr{C}^A$ = spectra parametrized over A.
- Total duality is called Costenoble–Waner duality.
- $\mathrm{Tr}(A_f)$ = the suspension spectrum of the twisted free loop space

$$\Lambda^f A = \left\{ \gamma \colon [0,1] \to A \;\middle|\; \gamma(1) = f(\gamma(0)) \right\}$$

- The total-duality trace of f is the Reidemeister trace. The theorem says that it refines the fixed-point index.

Theorem (Husseini, Crabb–James)

If A is a closed manifold of dimension ≥ 3, then the Reidemeister trace of f vanishes if and only if f is homotopic to a map without fixed points.

The intermediate example

- $\mathbf{S}$ = groupoids, $\mathscr{C}^A$ = A-diagrams of chain complexes
- $\mathrm{Tr}(A_f)$ = simplicial chains on the nerve of the twisted free loop groupoid $\Lambda^f A$, whose objects are morphisms $\gamma\colon x \to f(x)$ in A. Its H_0 is the free abelian group on the connected components of $\Lambda^f A$.
- The total-duality trace of f is the sum of the following.
  - For each object $x \in A$ literally fixed by f, we add $[\mathrm{id}_x]$.
  - For each generating morphism γ and every occurrence of γ^{-1} in $f(\gamma)$, say $f(\gamma) = \beta\gamma^{-1}\alpha$, we add $[\beta\gamma^{-1}]$.
  - For each generating morphism γ and every occurrence of γ in $f(\gamma)$, say $f(\gamma) = \beta\gamma\alpha$, we *subtract* $[\beta]$.

A question

What is the categorical meaning of these traces for finitely generated free groupoids?

Do they say anything about “fixed points” in any categorical sense?